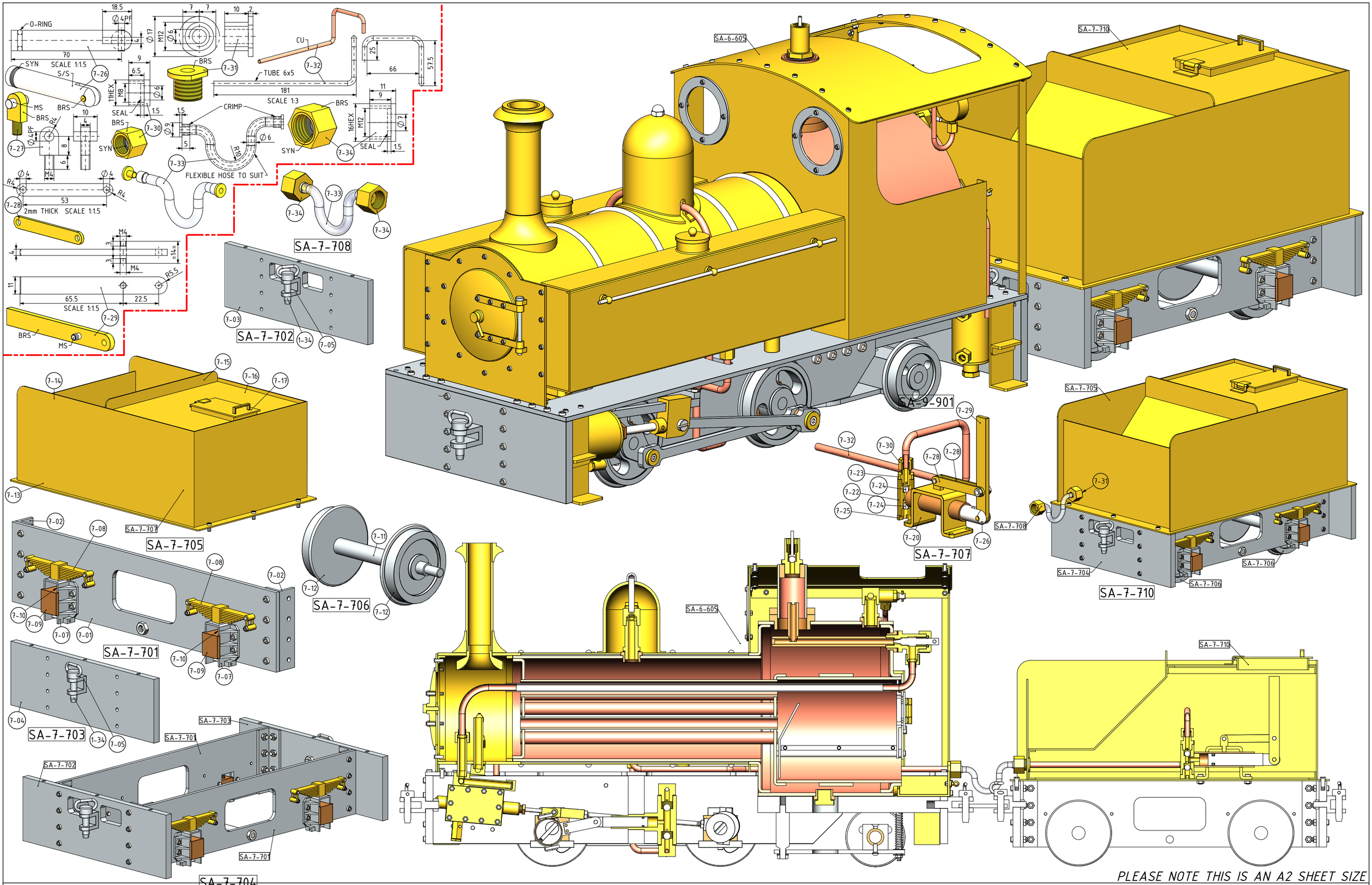

PLEASE NOTE THIS IS AN A2 SHEET SIZE

NOTES: THE ORIGINAL DESIGN AND BUILT OF THIS LOCO IS BY Mr. STEVE EATON (s.eaton@talk21.com) THE DRAWINGS SUPPLIED TO ME WERE DATED FROM 1999 TO 2003

TITLE MODEL OF A NARROW GAUGE STEAM LOCOMOTIVE FOR 3.5inch (89mm) GAUGE CALLED "TOBY".	DRAWING CONTENTS PARTS AND ASSEMBLIES	PROJECT No: 7B-15-00 JDW DRAUGHTING SERVICES J.A.M. DE WAAL. 12 BRIGHTWELL STREET PAPAKURA 2110. NEW ZEALAND. PHONE: 0064 09 2988815. MOB: 0211791000 E-MAIL: dewaal@xtra.co.nz.	PROJECTION JDWDS DATE: JANUARY 2018 SHEET: 10 OF 12
		MODEL SCALE: 1:1 DWG SCALE:1:1 @ A2 OR AS SHOWN Copyright © J.A.M. DE WAAL PAPAKURA NZ	A2 No:TOBY-89-M-10